SALES DRAWING SALES DRAWING SALES DRAWING

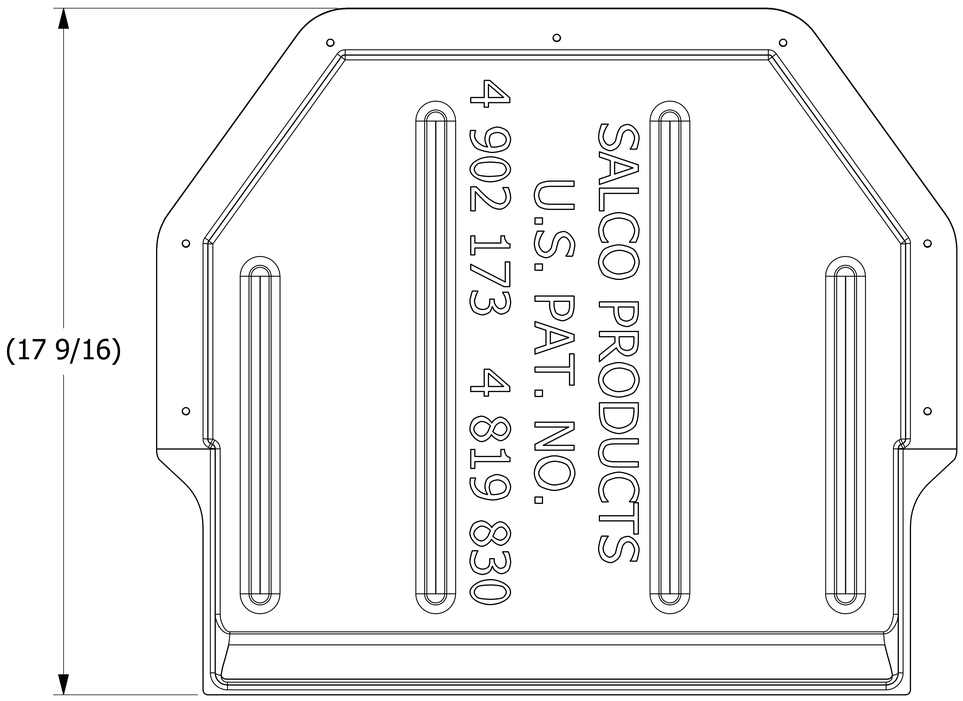

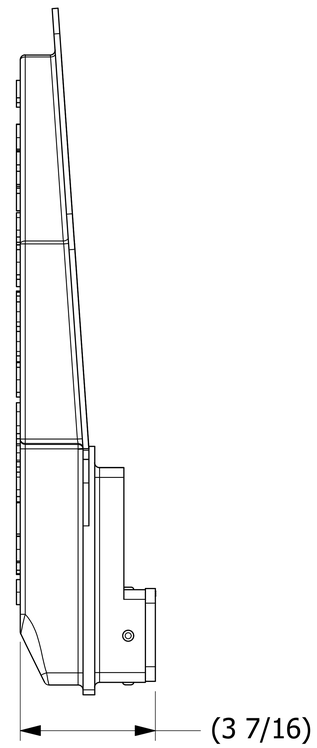

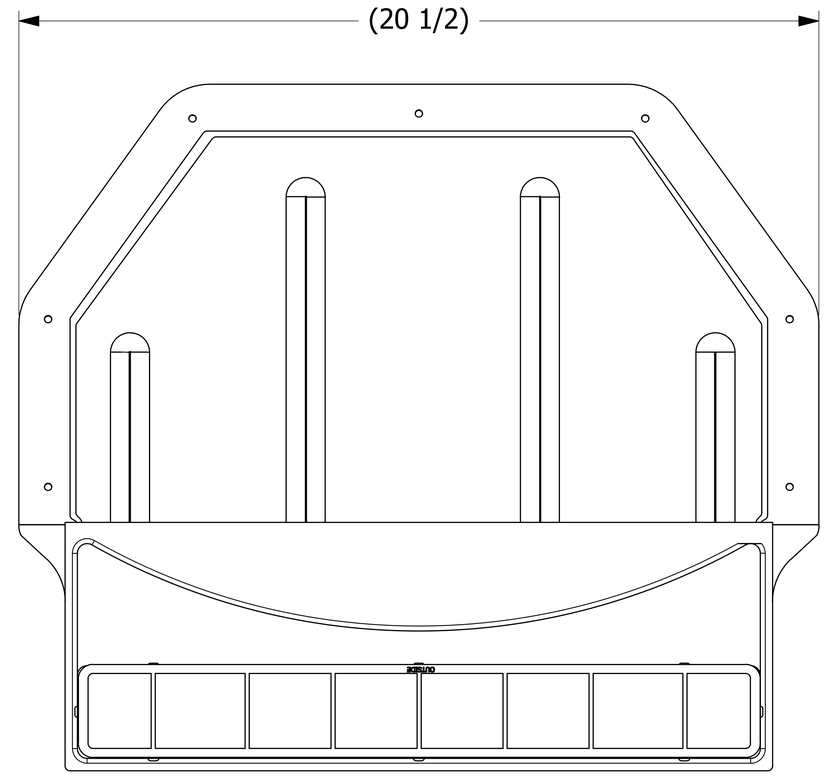

ISOMETRIC VIEW

SALES DRAWING SALES DRAWING SALES DRAWING

REV	BY	DATE	REF #	
C	CHL	7/29/20	202007291508	CHL
				PUB

UNLESS OTHERWISE SPECIFIED
DIMENSIONAL TOLERANCES
FRACTIONAL: ±1/16
X.XX: ±.03
X.XXX: ±.015
ANGULAR: ±1°
DEBURR ALL SHARP EDGES.
ALL MACHINED SURFACES TO HAVE A 125 RMS FINISH UNLESS NOTED OTHERWISE.
THIRD ANGLE PROJECTION

DRAWN BY:	BRW
CHECKED BY:	
PROTOTYPE DATE:	6/15/1995
APPROVED FOR PRODUCTION BY:	BRW
PRODUCTION DATE:	6/15/1995
SIZE:	E
DRAWING #:	5700

SALCO PRODUCTS, INC.

PART NAME: INTAKE SCOOP

MATERIAL: SEE BOM

PROJECT #:

SHEET #: 1 OF 1

SCALE: NTS

PART #: V30AISA

THIS PRINT, PROPERTY OF SALCO PRODUCTS INC, CONTAINS PROPRIETARY INFORMATION AND MUST NOT BE COPIED, REPRODUCED, OR USED DETRIMENTALLY TO OUR INTEREST.